Date 09/28/10

Version 3.2

Customer Custom Beer Wine Cocktail Bar

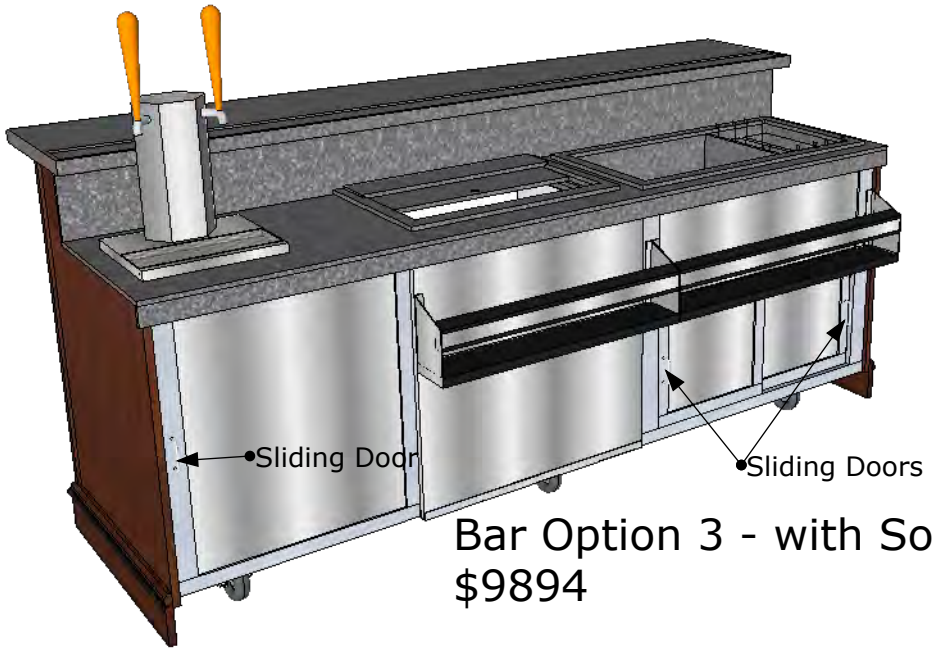

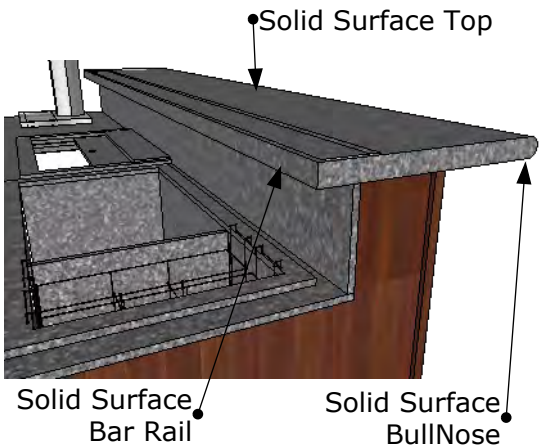

Bar Option 3 - with Solid Surface Top
$9894

Features:
Ipe hardwood construction
Heavy Duty commercial casters
Granite counters
Stainless Steel Appliances
Lockable storage
Impact Bumpers
Skirt (hides casters)
Beverage Ice Bin (24x18x24 - approx 100 lbs. Ice)
Combo Ice Bin with mixer storage
Speed Rails
Keg Tap
Beer Jockey Box (inside Beverage Ice Bin)
Bracket for Market Umbrella

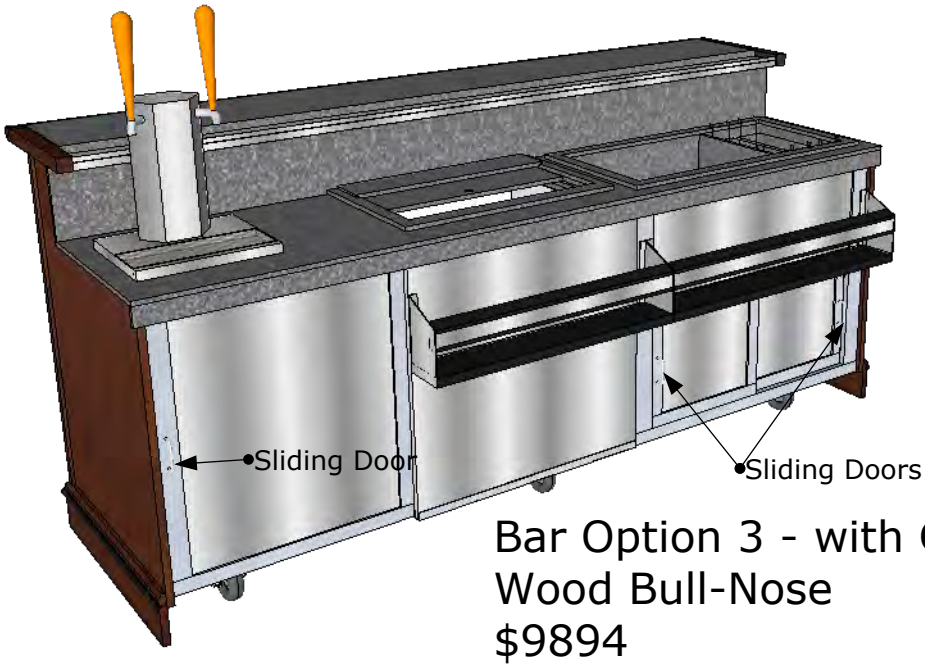

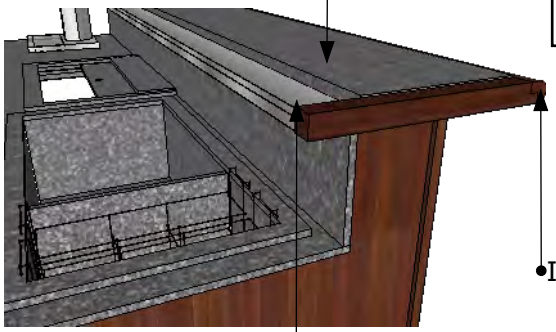

Bar Option 3 - with Granite Top and Wood Bull-Nose
$9894

VERMONT ISLANDS
KITCHENS & BARS FOR OUTDOOR LIVING

22 Browne Ct. Unit 115 Brattleboro, VT 05301 P. 802.246.2277 F. 802.256.2278

approved by_____